PDCN	REV.	APPV DATE	REVISIONS	DWN	DSGN	CHK	APPV
			INITIAL ISSUE				
2003033	A	3/28/03	COLOR GREEN WAS BLACK AND BLACK WAS BLACK W/WHITE TRACER, ADDED BLACK "24V +" WAS "12V +"	JS	DS HF	DRL	RG
2006310	A	11/20/06	PRV 4307-6470 WAS 4967-6470	JS	RM	DRL	RM

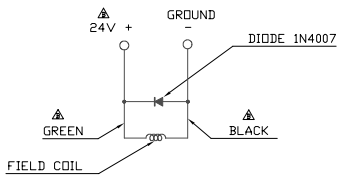

CIRCUIT DIAGRAM

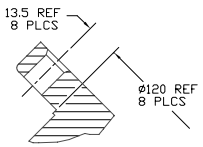

SECTION A-A

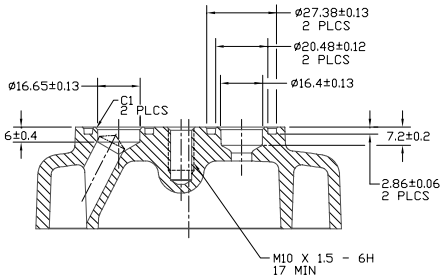

SECTION B-B

(SECTION WITH O-RINGS, SHIPPING PAD ASSEMBLY, AND BOLT REMOVED)

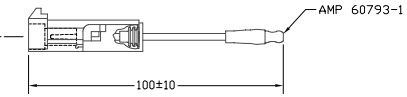

ASSEMBLED COMPRESSORS TO HAVE CONNECTORS ENGAGED (4860-0400)

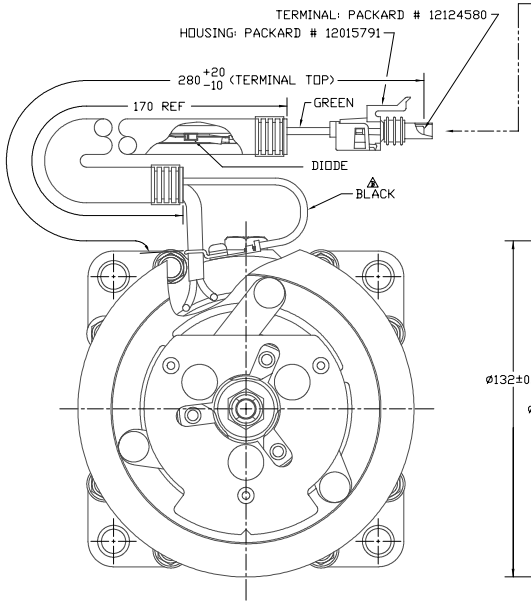

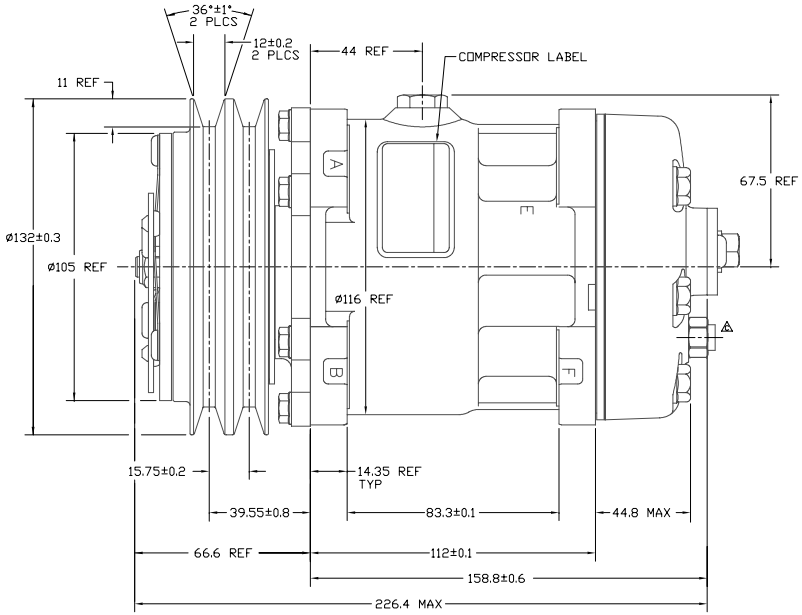

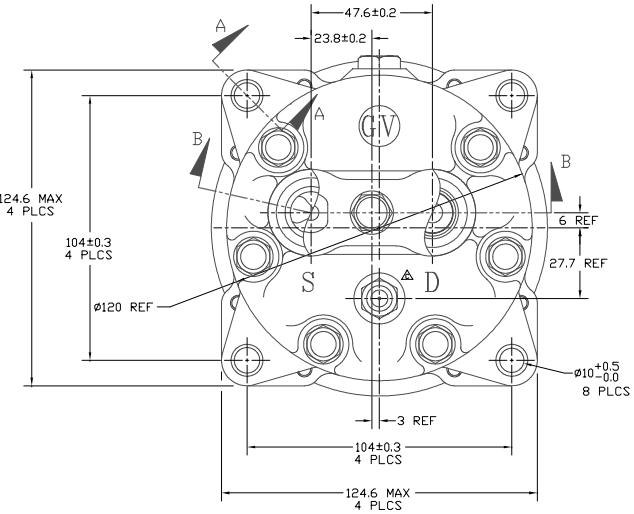

COMPRESSOR SPECIFICATIONS (REF)

DISPLACEMENT PER REVOLUTION	154.9 cc / rev. (9.5 cu. in. / rev.)
MAXIMUM ALLOWABLE R.P.M.	7000 R.P.M.
MAXIMUM ALLOWABLE CONTINUOUS R.P.M.	6000 R.P.M.
REFRIGERANT	R134a
OIL (SP-15)	200 cc (6.76 fl.oz.)
WEIGHT	7.6 Kg (16.8 LBS)

CLUTCH SPECIFICATIONS (REF)

RATED VOLTAGE	DC 24V
BREAKAWAY TORQUE	3.5 kgf-m min. @ 24V
MINIMUM ENGAGEMENT VOLTAGE	16V @ AIR GAP 0.6mm
POWER CONSUMPTION	34 watts max.
BELT TYPE	A TYPE
MAXIMUM ALLOWABLE BELT TENSION	60 kgf per belt
PULLEY DIAMETER	ø132 mm (5.2 in.)
CLUTCH TYPE	HEAVY DUTY

NOTE:

1. N_2 HOLDING CHARGE DELETED.

DO NOT SCALE

REV. LEVEL	RELEASED FOR: ENGG. DEVELOPMENT	
A	DSGN	M Harrington
	DWN	J Sokolowski
	CHK	Dennis Lee 8/9/02
	APPV.	N Burns
	APPV. DATE	8/13/02
REV. LEVEL	RELEASED FOR: DESIGN VALIDATION	
A	DSGN	M Harrington
	APPV.	N Burns
	APPV. DATE	8/16/02
REV. LEVEL	RELEASED FOR: PRODUCTION VAL'D.	
A	DSGN	M Harrington
	APPV.	N Burns
	APPV. DATE	8/16/02
REV. LEVEL	RELEASED FOR: PRODUCTION	
B	DSGN	N. Burns
	APPV.	N. Burns
	APPV. DATE	12/16/03

SANDEN

SANDEN INTERNATIONAL (U.S.A.), INC.

DRAWN SCALE REF 1:1 | PLOTTED SCALE REF 1:1 | METRIC

This drawing and the information contained hereon are CONFIDENTIAL and PROPRIETARY to Sanden International (U.S.A.), Inc., are received in CONFIDENCE and shall not be used, copied, or disclosed to others without the written permission of Sanden International (U.S.A.), Inc.

INTERPRETATION OF THIS DRAWING PER ASME Y14.5M-1994

THIRD ANGLE PROJECTION | SIZE D

MATERIAL:

NAME: COMPRESSOR

DWG. NO. 4435-6000 | REV C