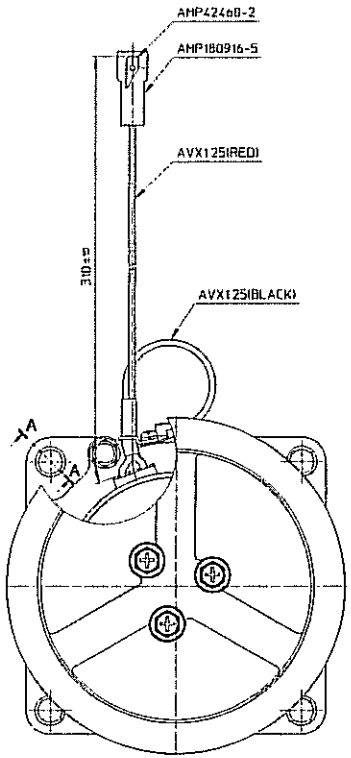

PARTIAL SECT. A-A

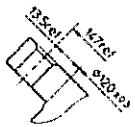

PARTIAL SECT. B-B

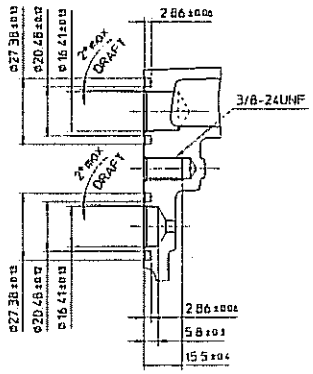

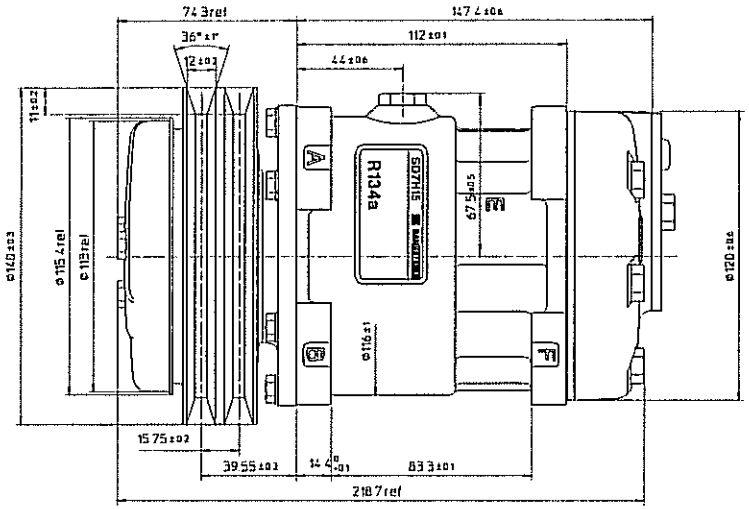

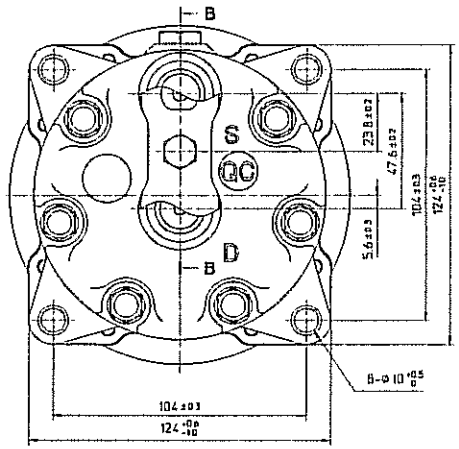

COMPRESSOR SPECIFICATIONS

BORE	ø29.3	mm
STROKE	32.8	mm
NUMBER OF CYLINDERS	7	
DISPLACEMENT PER REVOLUTION	154.9	cc/rev
MAXIMUM ALLOWABLE CONTINUOUS SPEED	5000	r.p.m
MAXIMUM DOWNSHIFT SPEED	5000	r.p.m
REFRIGERANT	R134a	
OIL	SP-10 OR EQUIVALENT	
OIL CHARGE	190	cc
ROTATION (CLUTCH SIDE VIEW)	CLOCKWISE	
WEIGHT		kg

CLUTCH SPECIFICATIONS

RATED VOLTAGE	DC 12	V
MINIMUM BREAKAWAY TORQUE	3.5	kg·m
MINIMUM ENGAGEMENT VOLTAGE	DC 7.5	V
MAXIMUM POWER CONSUMPTION	43	W
MAXIMUM ALLOWABLE CONTINUOUS SPEED	5000	r.p.m
MAXIMUM DOWNSHIFT SPEED	5000	r.p.m.
BELT TYPE	A	TYPE
PULLEY DIAMETER	ø140	mm
WEIGHT		kg

			MATERIAL	PART NO	NAME: COMPRESSOR
			THIRD ANGLE PROJECTION	SCALE 1:1	
			DESIGNED BY	DATE	MODEL: SD7H15QC
			CHECKED BY	DATE	
NO	REVISION RECORD	BY	DATE	APPROVED BY DATE	DRAWING NO: 8088 - 6000

SANDEN SANDEN CORPORATION SANDEN INTERNATIONAL CORPORATION