07-34002, 34003 & 34004 Series Wiring Diagram

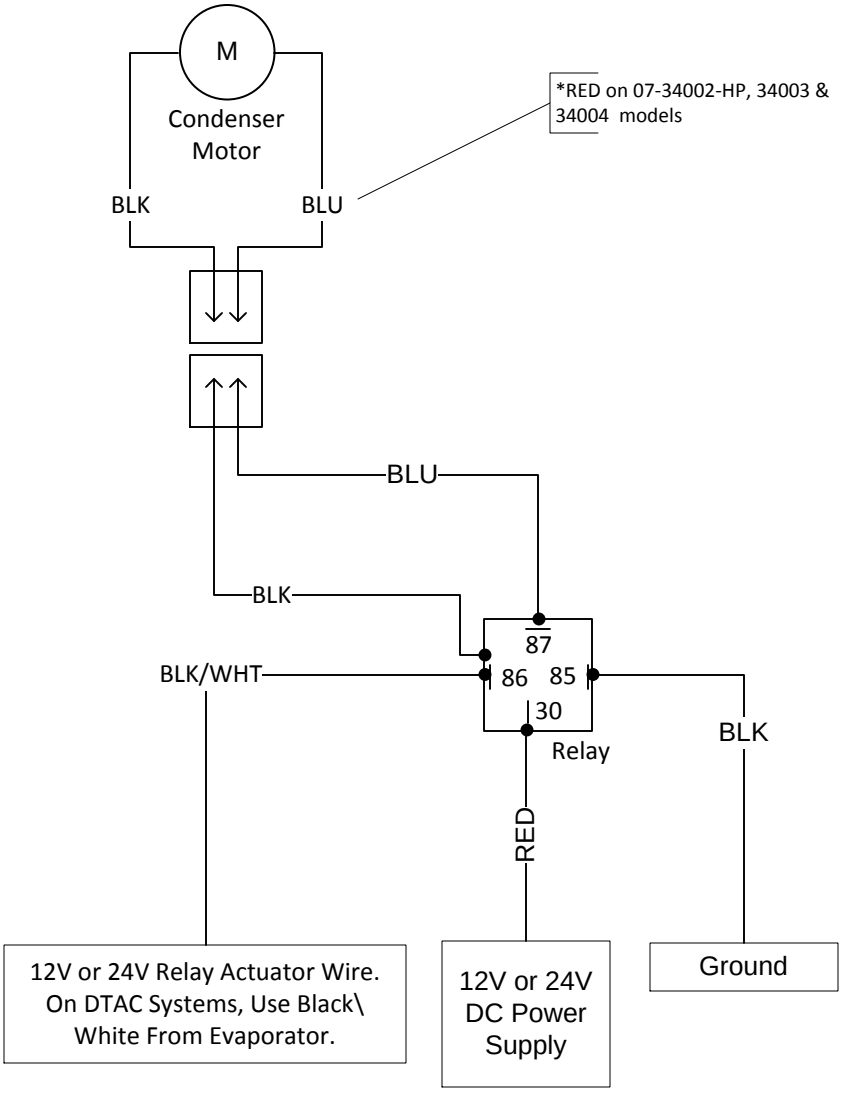

Manufacturer of Heavy Equipment Heat/Cool Systems
5130 Edgefield Ln, TX 76065 USA
Phone 1-800-527-9477 Fax 1-800-299-5972
www.dtac.com

12-00098
08.26.10